35 TON SINGLE-ACTING PUNCH

- Coupling port rotates 360° for work in tight areas.
- Punches .50" hole through mild steel.
- Round, square & oblong punch & die sets available.
- Uses competitive interchangeable punches & dies.
- Mounting holes for production punching.
- 10% lighter than other portable punches.
- Punch mounted motor control for safety.
- Ergonomic two handle design provides better balance and control.

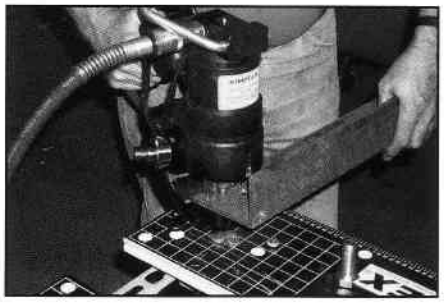

Only Simplex offers 360° rotating port and a pump mounted motor control, so that work can be performed in tight areas safely and more productively as shown in this small fabricating shop.

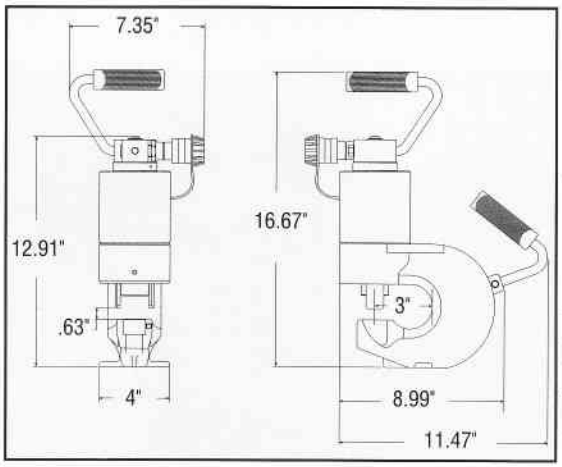

Model Number	Punch	Punch & Die Set	Pump	Hose	Weight Punch Only (lbs./kg)
SPH35	SPH35	----	----	----	32/14.5
SPH35S		Standard Set	----	----	
SPH35SP		DS-44, DS-56, DS-69, DS-81	SPH1001	HC6	
SPH35M		Metric Set	----	----	
SPH35MP		DS-38, DS-44, DS-53, DS-69	SPH1001	HC6	

Contact Factory for additional dimensions.

Punch and Die Type	Standard Punch Model#	Standard Die Model #	Standard Punch & Die Set	Bevel Punch & Die Set for I-Beams	Bevel Punch & Die Set for U-Beams	Hole Size (in./mm)	Bolt Size (in./mm)	*Maximum Metal Thickness To Be Punched (in.)										
								A	B	C	D	E	F	G	H	I	J	K
Round	DP-31	DD-31	DS-31	DSB-31	---	.31/7.9	1/4/---	.31	.31	.25	.25	.25	.25	.13	.19	.25	..25	.25
Round	DP-38	DD-38	DS-38	DSB-38	---	.38/9.5	5/16/M8	.38	.38	.31	.31	.31	.31	.19	.25	.31	.31	.31
Round	DP-44	DD-44	DS-44	DSB-44	DSBU-44	.44/11.1	3/8/M10	.44	.44	.38	.38	.38	.31	.19	.31	.31	.31	.31
Round	DP-53	DD-53	DS-53	DSB-53	DSBU-53	.53/13.5	7/16/M12	.50	.50	.44	.44	.44	.38	.25	.31	.38	.38	.38
Round	DP-56	DD-56	DS-56	DSB-56	---	.56/14.3	1/2/---	.50	.50	.50	.44	.50	.44	.25	.38	.44	.44	.44
Round	DP-69	DD-69	DS-69	DSB-69	DSBU-69	.69/17.5	5/8/M16	.50	.50	.50	.44	.50	.40	.25	.31	.40	.40	.40
Round	DP-78	DD-78	DS-78	---	---	.78/19.8	---/M18	.50	.50	.50	.44	.50	.38	.25	.31	.38	.39	.38
Round	DP-81	DD-81	DS-81	---	---	.81/20.6	3/4/---	.50	.50	.50	.44	.50	.31	.19	.31	.31	.31	.31
Square	DP-45	DD-45	DS-45	---	---	.31/7.9	1/4/---	.31	.31	.25	.25	.25	.25	.13	.19	.25	.25	.25
Square	DP-54	DD-54	DS-54	---	---	.38/9.5	5/16/M8	.38	.38	.31	.31	.31	.31	.19	.25	.31	.31	.31
Square	DP-63	DD-63	DS-63	---	---	.44/11.1	3/8/M10	.44	.44	.38	.38	.38	.31	.19	.31	.31	.31	.31
Square	DP-72	DD-72	DS-72	---	---	.50/12.7	7/16/M12	.50	.50	.44	.44	.44	.38	.25	.31	.38	.38	.31
Oblong	DP-10	DD-10	DS-10	---	---	.31 x .75/7.9 x 19	1/4/---	.31	.31	.25	.25	.25	.25	.13	.19	.25	.25	.25
Oblong	DP-12	DD-12	DS-12	---	---	.38 x .75/9.5 x 19	3/16/M8	.38	.38	.31	.31	.31	.31	.19	.25	.31	.31	.31
Oblong	DP-18	DD-18	DS-18	---	---	.44 x .75/11.1 x 19	3/8/M10	.44	.44	.38	.38	.38	.31	.19	.31	.31	.31	.31
Oblong	DP-25	DD-25	DS-25	---	---	.50 x .75/12.7 x 19	7/16/M12	.50	.50	.44	.44	.44	.38	.25	.31	.38	.38	.38

***QUALITY OF STEEL REFERENCE TABLE ABOVE**

A: Mild A-7
B: Boiler Plate
C: Structural A-36
D: Struct Corten (ASTM A242)
E: Cold Rolled C-1018
F: Hot Rolled C1050
G: Hot Rolled C-1095
H: Hot Rolled C-1095 Annealed
I: Stainless Annealed
J: Stainless 304 Hot Rolled
K: Stainless 316 Cold Rolled