Chicago Pneumatic
1800 Overview Drive • Rock Hill SC • 29730 USA

CP724H & CP726H Series
Impact Wrench

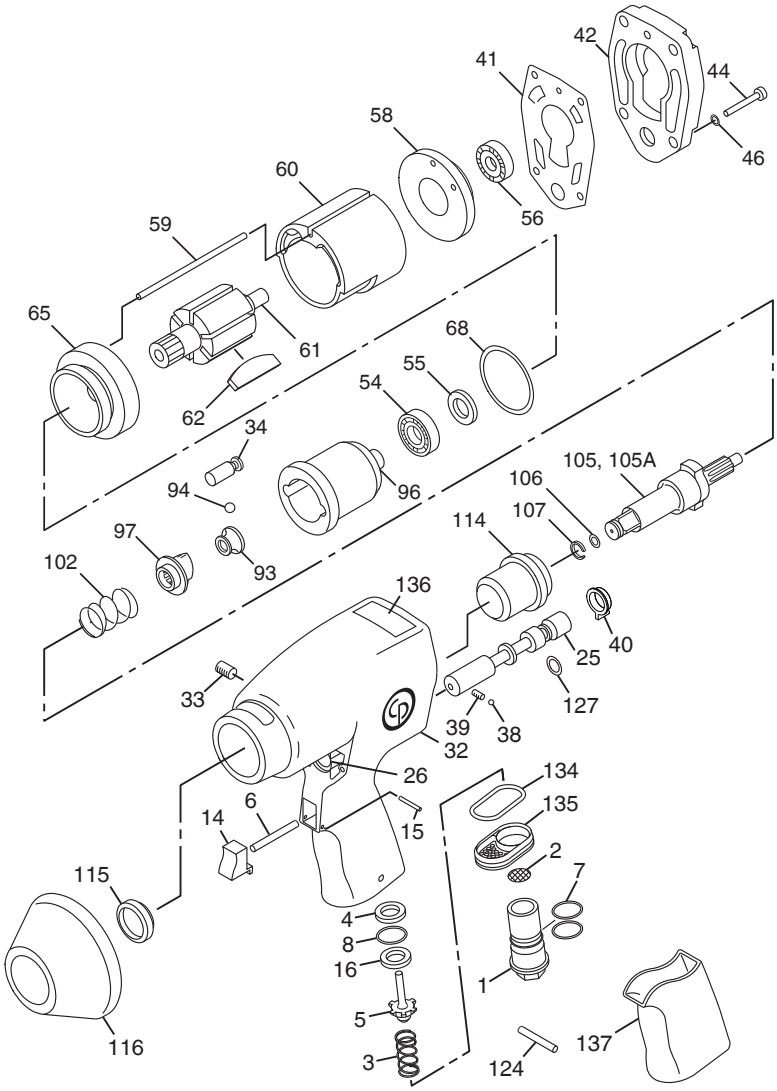

Index No.	Part No.	Description	No. Req'd.
1	CA147022	Bushing-Air Inlet (1/4 in. NPT)	1
2	CA059037	Screen-Air	1
3	CA142464	Spring-Throttle	1
4	CA149095	Spacer	1
5	CA142460	Valve-Throttle	1
6	CA144831	Pin-Throttle Push	1
7	C105693	O-Ring (-017)	2
8	CA149096	O-Ring	1
14	CA147017	Trigger-Throttle	1
15	CA144836	Pin-Roll	1
16	C139037	Seat-Throttle	1
25	CA155206	Valve-Reverse	1
26	CA155211	Bushing-Reverse Valve	1
32	CA155209	Housing-Motor (Incl: Index No. 26, 33, 114, 115, 136)	1
33	S089953	Plug-Pipe (1/16 in. NPT)	1
34	KF137787	Pin-Anvil Hammer	2
38	S008613	Ball	1
39	CA147021	Spring-Detent	1
40	CA155212	Switch	1
41	CA155213	Gasket-Housing Cover	1
42	CA155207	Cover-Motor Housing	1
44	CA088193	Screw-Hex Socket Head	4
46	S091250	Lockwasher	4
54	S065618	Bearing-Ball	1
55	C090396	Seal-Grease	1
56	C075878	Bearing-Ball	1
58	KF136477	Plate-Rear End	1
59	KF136504	Dowel-Liner	1
60	KF136479	Liner	1
61	KF136481	Rotor	1
62	KF137810	Blade Set-Rotor	1
65	KF136482	Plate-Front End	1

Index No.	Part No.	Description	No. Req'd.
68	C042234	O-Ring	1
93	C102506	Ball-Pilot	1
94	C014143	Ball-Steel .219"dia.	1
96	KF137788	Cage-Hammer	1
97	C119091	Cam-Hammer	1
102	KF136495	Spring-Cam Release	1
105	CA144779	Shank-Anvil (3/8" Sq. Dr. CP724H) (Incl: Index Nos. 106, 107)	1
105A	KF136506	Shank-Anvil (1/2" Sq. Dr. CP726H) (Incl: Index Nos. 106, 107)	1
106	CA147075	O-Ring (CP724H)	1
106A	P083071	O-Ring (CP726H) (Not Shown)	1
107	CA147674	Retainer-Socket (CP724H)	1
107A	CA088097	Retainer-Socket (CP726H) (not shown)	1
114	KF136484	Bushing-Anvil Shank	1
115	KF136490	Seal-Oil	1
116	KF136485	Shield-Nose	1
124	R086991	Pin-Roll	1
127	C148187	O-Ring	1
134	CA148528	Gasket	1
135	CA147023	Deflector-Exhaust	1
136	CA155878	Decal-Safety Warning	1
137	8940158432	Grip	1

Tune-Up Kits
CA155218 (CP724H) (Incl: Index Nos. 7, 8, 41, 55, 62, 68, 106, 107, 115 & 127)
CA155309 (CP726H)

Repair Kits
CA155310 (CP724H) (Incl: All Parts in Tune-Up Kit Plus Index Nos. 34, 94, 102 & 105)
CA155311 (CP726H)

PRINTED IN USA KEK/12-02